Cambridge Assessment International Education

Cambridge International AS & A Level

CANDIDATE NAME

CENTRE NUMBER

CANDIDATE NUMBER

4146271884

PHYSICS **9702/23**

Paper 2 AS Level Structured Questions **October/November 2020**

1 hour 15 minutes

You must answer on the question paper.

No additional materials are needed.

INSTRUCTIONS

- Answer **all** questions.
- Use a black or dark blue pen. You may use an HB pencil for any diagrams or graphs.
- Write your name, centre number and candidate number in the boxes at the top of the page.
- Write your answer to each question in the space provided.
- Do **not** use an erasable pen or correction fluid.
- Do **not** write on any bar codes.
- You may use a calculator.
- You should show all your working and use appropriate units.

INFORMATION

- The total mark for this paper is 60.
- The number of marks for each question or part question is shown in brackets [ ].

This document has **16** pages. Blank pages are indicated.

© UCLES 2020

[Turn over

Data

speed of light in free space	$c = 3.00 \times 10^{8}\,\text{m s}^{-1}$
permeability of free space	$\mu_0 = 4\pi \times 10^{-7}\,\text{H m}^{-1}$
permittivity of free space	$\varepsilon_0 = 8.85 \times 10^{-12}\,\text{F m}^{-1}$
	$(\frac{1}{4\pi\varepsilon_0} = 8.99 \times 10^{9}\,\text{m F}^{-1})$
elementary charge	$e = 1.60 \times 10^{-19}\,\text{C}$
the Planck constant	$h = 6.63 \times 10^{-34}\,\text{J s}$
unified atomic mass unit	$1\,\text{u} = 1.66 \times 10^{-27}\,\text{kg}$
rest mass of electron	$m_e = 9.11 \times 10^{-31}\,\text{kg}$
rest mass of proton	$m_p = 1.67 \times 10^{-27}\,\text{kg}$
molar gas constant	$R = 8.31\,\text{J K}^{-1}\,\text{mol}^{-1}$
the Avogadro constant	$N_A = 6.02 \times 10^{23}\,\text{mol}^{-1}$
the Boltzmann constant	$k = 1.38 \times 10^{-23}\,\text{J K}^{-1}$
gravitational constant	$G = 6.67 \times 10^{-11}\,\text{N m}^2\,\text{kg}^{-2}$
acceleration of free fall	$g = 9.81\,\text{m s}^{-2}$

© UCLES 2020

Formulae

uniformly accelerated motion	$s = ut + \frac{1}{2}at^2$ $v^2 = u^2 + 2as$
work done on/by a gas	$W = p\Delta V$
gravitational potential	$\phi = -\frac{Gm}{r}$
hydrostatic pressure	$p = \rho gh$
pressure of an ideal gas	$p = \frac{1}{3}\frac{Nm}{V}\langle c^2 \rangle$
simple harmonic motion	$a = -\omega^2 x$
velocity of particle in s.h.m.	$v = v_0 \cos \omega t$ $v = \pm \omega \sqrt{(x_0^2 - x^2)}$
Doppler effect	$f_o = \frac{f_s v}{v \pm v_s}$
electric potential	$V = \frac{Q}{4\pi\varepsilon_0 r}$
capacitors in series	$1/C = 1/C_1 + 1/C_2 + \ldots$
capacitors in parallel	$C = C_1 + C_2 + \ldots$
energy of charged capacitor	$W = \frac{1}{2}QV$
electric current	$I = Anvq$
resistors in series	$R = R_1 + R_2 + \ldots$
resistors in parallel	$1/R = 1/R_1 + 1/R_2 + \ldots$
Hall voltage	$V_H = \frac{BI}{ntq}$
alternating current/voltage	$x = x_0 \sin \omega t$
radioactive decay	$x = x_0 \exp(-\lambda t)$
decay constant	$\lambda = \frac{0.693}{t_{\frac{1}{2}}}$

© UCLES 2020

[Turn over

Answer **all** the questions in the spaces provided.

1 **(a)** An electromagnetic wave has a wavelength of 85 μm.

(i) State the wavelength, in m, of the wave.

wavelength = ... m [1]

(ii) Calculate the frequency, in THz, of the wave.

frequency = ... THz [2]

(iii) State the name of the region of the electromagnetic spectrum that contains this wave.

..... [1]

(b) The current I in a coil of wire produces a magnetic field. The energy E stored in the magnetic field is given by

$$E = \frac{I^2 L}{2}$$

where L is a constant.

The manufacturer of the coil states that the value of L, in SI base units, is $7.5 \times 10^{-6} \pm 5\%$. The current I in the coil is measured as (0.50 ± 0.02) A.

The values of L and I are used to calculate E.

Determine the percentage uncertainty in the value of E.

percentage uncertainty = ... % [2]

[Total: 6]

© UCLES 2020

2 **(a)** State what is meant by the *centre of gravity* of a body.

.....

.....

..... [2]

(b) A uniform wooden post AB of weight 45 N stands in equilibrium on hard ground, as shown in Fig. 2.1.

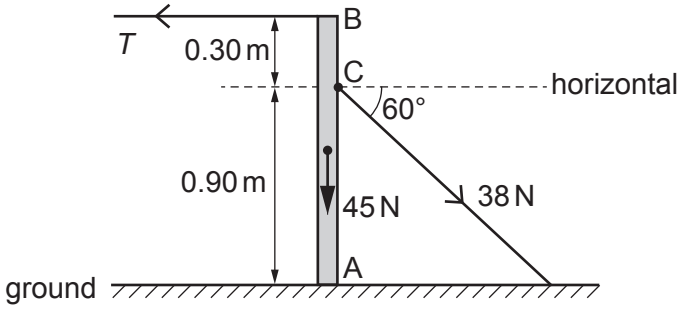

Fig. 2.1 (not to scale)

End A of the vertical post is supported by the ground. A horizontal wire with tension *T* is attached to end B of the post. Another wire, attached to the post at point C, is at an angle of 60° to the horizontal and has tension 38 N. The distances along the post of points A, B and C are shown in Fig. 2.1.

(i) Calculate the horizontal component of the force exerted on the post by the wire connected to point C.

horizontal component of force = ... N [1]

(ii) By considering moments about end A, determine the tension *T*.

T = ... N [2]

(iii) Calculate the vertical component of the force exerted on the post at end A.

force = ... N [1]

[Total: 6]

© UCLES 2020

3 A ball is fired horizontally with a speed of $41.0\,m\,s^{-1}$ from a stationary cannon at the top of a hill. The ball lands on horizontal ground that is a vertical distance of 57 m below the cannon, as shown in Fig. 3.1.

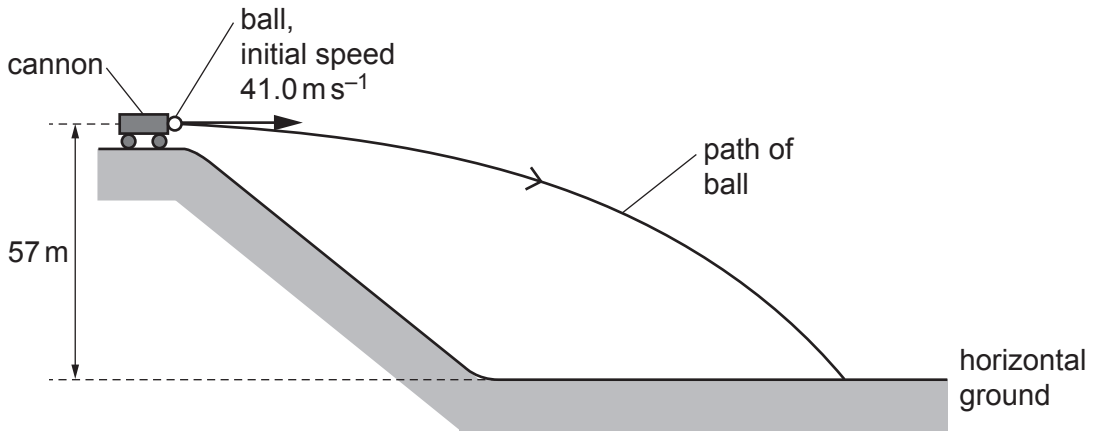

Fig. 3.1 (not to scale)

Assume air resistance is negligible.

(a) Show that the time taken for the ball to reach the ground, after being fired, is 3.4 s.

[2]

(b) Calculate the horizontal distance of the ball from the cannon at the point where the ball lands on the ground.

horizontal distance = ... m [1]

(c) Determine the magnitude of the displacement of the ball from the cannon at the point where the ball lands on the ground.

displacement = ... m [2]

© UCLES 2020

(d) The ball leaves the cannon at time $t = 0$.

On Fig. 3.2, sketch a graph to show the variation of the magnitude v of the vertical component of the velocity of the ball with time t from $t = 0$ to $t = 3.4\,s$.
Numerical values are not required.

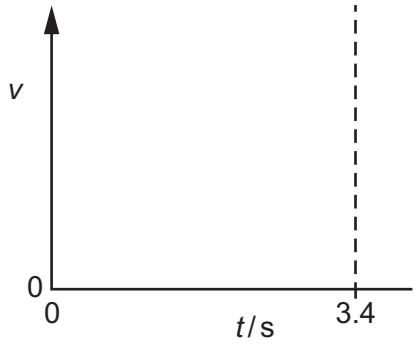

Fig. 3.2

[1]

(e) The cannon recoils horizontally with a speed of $0.340\,m\,s^{-1}$ when it fires the ball. The total mass of the ball and the cannon is 1480 kg. Assume that no external horizontal forces act on the ball-cannon system.

Determine, to three significant figures, the mass of the ball.

mass = ... kg [2]

(f) The cannon now fires a ball of smaller mass. Assume that air resistance is still negligible.

State and explain the change, if any, to the graph in Fig. 3.2 due to the decreased mass of the ball.

.....

.....

..... [2]

[Total: 10]

© UCLES 2020

4 **(a)** State Hooke's law.

.....

..... [1]

(b) A spring is fixed at one end. A compressive force F is applied to the other end. The variation of the force F with the compression x of the spring is shown in Fig. 4.1.

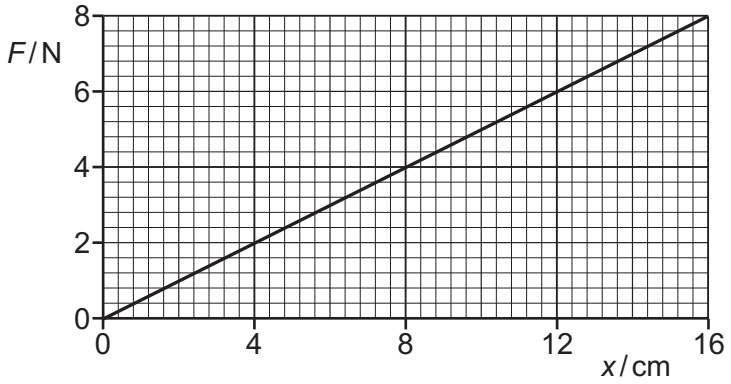

Fig. 4.1

Show that the elastic potential energy of the spring is 0.64 J when its compression is 16.0 cm.

[2]

(c) The spring in **(b)** is used to project a toy car along a track from point X to point Y, as illustrated in Fig. 4.2.

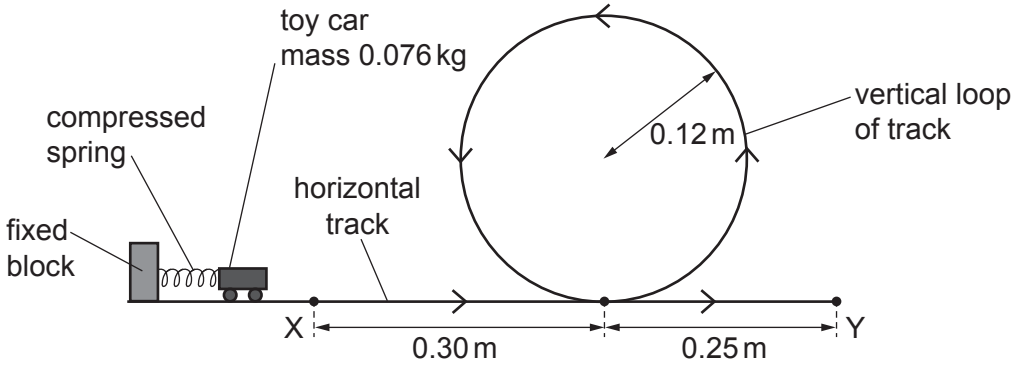

Fig. 4.2 (not to scale)

The spring is initially given a compression of 16.0 cm. The car of mass 0.076 kg is held against one end of the compressed spring. When the spring is released it projects the car forward. The car leaves the spring at point X with kinetic energy that is equal to the initial elastic potential energy of the compressed spring.

© UCLES 2020

The car follows the track around a vertical loop of radius 0.12 m and then passes point Y. Assume that friction and air resistance are negligible.

Calculate:

(i) the speed of the car at X

speed = ... $m\,s^{-1}$ [2]

(ii) the kinetic energy of the car when it is at the top of the loop

kinetic energy = ... J [3]

(iii) the speed of the car at Y.

speed = ... $m\,s^{-1}$ [1]

(d) In practice, a resistive force due to friction and air resistance acts on the car so that its kinetic energy at Y is 0.23 J less than its kinetic energy at X.

Determine the average resistive force acting on the car for its movement from X to Y.

average resistive force = ... N [3]

[Total: 12]

© UCLES 2020

5 **(a)** A sound wave is detected by a microphone that is connected to a cathode-ray oscilloscope (CRO). The trace on the screen of the CRO is shown in Fig. 5.1.

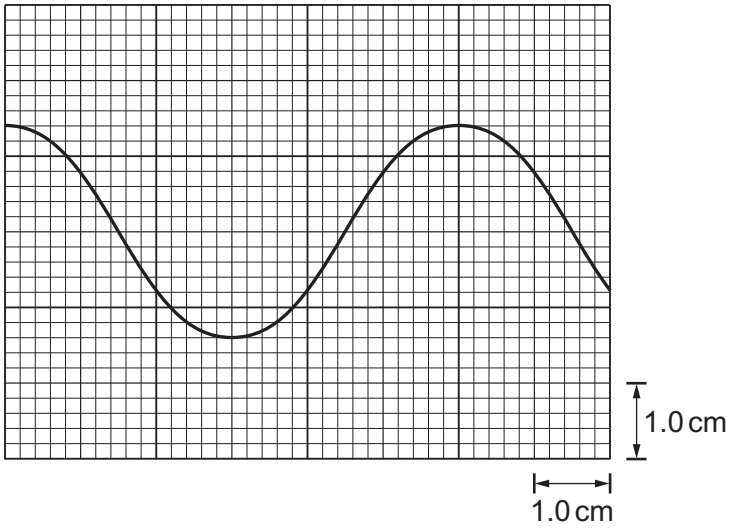

Fig. 5.1

The time-base setting of the CRO is $2.0 \times 10^{-5}\,\text{s}\,\text{cm}^{-1}$.

(i) Determine the frequency of the sound wave.

frequency = ... Hz [2]

(ii) The intensity of the sound wave is now doubled. The frequency is unchanged. Assume that the amplitude of the trace is proportional to the amplitude of the sound wave.

On Fig. 5.1, sketch the new trace shown on the screen. [2]

(iii) The time-base is now switched off.

Describe the trace seen on the screen.

.....

..... [1]

© UCLES 2020

(b) A beam of light of a single wavelength is incident normally on a diffraction grating, as illustrated in Fig. 5.2.

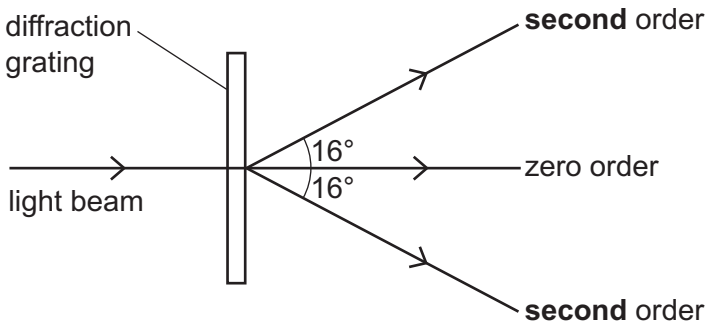

Fig. 5.2 (not to scale)

Fig. 5.2 does not show all of the emerging beams from the grating. The angle between the **second**-order emerging beam and the central zero-order beam is 16°. The grating has a line spacing of 3.4×10^{-6} m.

(i) Calculate the wavelength of the light.

wavelength = ... m [2]

(ii) Determine the highest order of emerging beam from the grating.

highest order = ... [2]

[Total: 9]

6 **(a)** Define *electric potential difference* (*p.d.*).

.....

..... [1]

(b) A wire of cross-sectional area A is made from metal of resistivity ρ. The wire is extended. Assume that the volume V of the wire remains constant as it extends.

Show that the resistance R of the extending wire is inversely proportional to A^2.

[2]

(c) A battery of electromotive force (e.m.f.) E and internal resistance r is connected to a variable resistor of resistance R, as shown in Fig. 6.1.

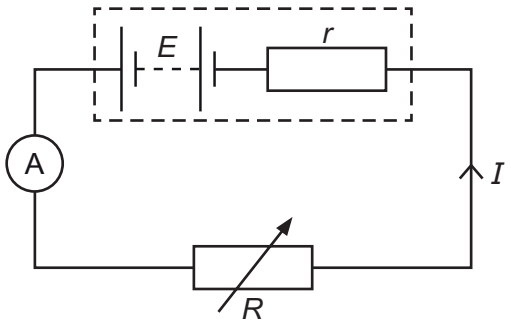

Fig. 6.1

The current in the circuit is I.

Use Kirchhoff's second law to show that

$$R = \left(\frac{E}{I}\right) - r.$$

[1]

(d) An ammeter is used in the circuit in **(c)** to measure the current I as resistance R is varied. Fig. 6.2 is a graph of R against $\frac{1}{I}$.

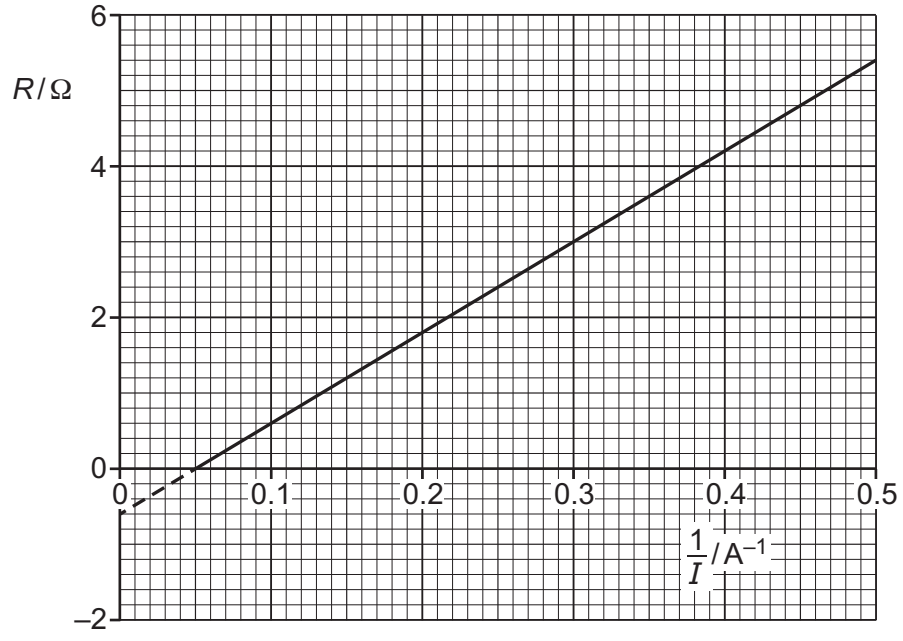

Fig. 6.2

(i) Use Fig. 6.2 to determine the power dissipated in the variable resistor when there is a current of 2.0 A in the circuit.

power = ... W [3]

(ii) Use Fig. 6.2 and the equation in **(c)** to:

1. state the internal resistance r of the battery

r = ... Ω

2. determine the e.m.f. E of the battery.

E = ... V
[3]

[Total: 10]

7 Two vertical metal plates are separated by a distance d in a vacuum, as shown in Fig. 7.1.

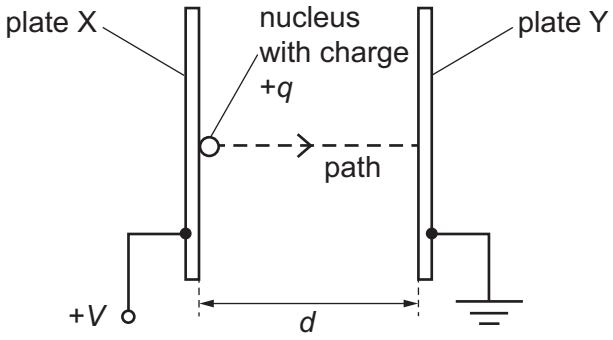

Fig. 7.1 (not to scale)

The potential difference (p.d.) between the plates is V. A nucleus with charge $+q$ is initially at rest on plate X. The nucleus is accelerated by the uniform electric field from plate X along a horizontal path to plate Y.

(a) State expressions, in terms of some or all of d, q and V, for:

(i) the magnitude of the electric field strength

electric field strength = ... [1]

(ii) the magnitude of the electric force acting on the nucleus

force = ... [1]

(iii) the kinetic energy of the nucleus when it reaches plate Y.

kinetic energy = ... [1]

(b) State the change, if any, in the kinetic energy of the nucleus on reaching plate Y when the following separate changes are made.

(i) The distance d is halved, but the p.d. V remains the same.

..... [1]

(ii) The nucleus is replaced by a different nucleus that is an isotope of the original nucleus with fewer neutrons.

..... [1]

© UCLES 2020

(c) The nucleus is carbon-14 ($^{14}_{6}C$). This nucleus decays to form a new nucleus by releasing a β^- particle and only one other particle of negligible mass.

(i) Calculate the nucleon number and the proton number of the **new** nucleus.

nucleon number = ...

proton number = ...
[1]

(ii) State the name of the particle of negligible mass.

..... [1]

[Total: 7]

BLANK PAGE

Permission to reproduce items where third-party owned material protected by copyright is included has been sought and cleared where possible. Every reasonable effort has been made by the publisher (UCLES) to trace copyright holders, but if any items requiring clearance have unwittingly been included, the publisher will be pleased to make amends at the earliest possible opportunity.

To avoid the issue of disclosure of answer-related information to candidates, all copyright acknowledgements are reproduced online in the Cambridge Assessment International Education Copyright Acknowledgements Booklet. This is produced for each series of examinations and is freely available to download at www.cambridgeinternational.org after the live examination series.

Cambridge Assessment International Education is part of the Cambridge Assessment Group. Cambridge Assessment is the brand name of the University of Cambridge Local Examinations Syndicate (UCLES), which itself is a department of the University of Cambridge.

© UCLES 2020